*Jurnal Teknologi*, 34(A) Jun 2001: 71–84


# ORTHOGONAL LEAST SQUARE ALGORITHM AND ITS APPLICATION FOR MODELLING SUSPENSION SYSTEM

ROBIAH AHMAD[1] & HISHAMUDDIN JAMALUDDIN[2]

**Abstract**. A mathematical model is important to find a dynamic response of a system. The information obtained from the model could be used for investigation and analysis. Modelling based on input and output data is known as system identification. One of the issues in system identification is the parameter estimation and model structure selection where various methods have been studied including the orthogonal least square algorithm. Orthogonal least square estimation is an algorithm which can determine the structure of a model by identifying the significant terms contributed to the model and also capable of providing the final values of parameter estimates. The derivation of the algorithm is presented and its application to the modelling of a car suspension system is included to demonstrate the effectiveness of the algorithm.

*Keywords*: Orthogonal least square algorithm, dynamic system modelling, system identification, suspension system model.

**Abstrak**. Model matematik adalah penting bagi mendapatkan sambutan dinamik sesuatu sistem. Maklumat yang diperolehi boleh digunakan untuk mengkaji dan menganalisis sistem tersebut. Pemodelan yang dilakukan berdasarkan data masukan dan keluaran bagi sesuatu sistem dikenali sebagai pengenalpastian sistem. Salah satu isu di dalam pengenalpastian sistem ialah anggaran parameter dan pemilihan struktur model di mana berbagai kaedah telah digunakan termasuk kuasa dua terkecil ortogon. Algoritma kuasa dua terkecil ortogon adalah satu algoritma yang boleh menentukan struktur sesebuah model dengan memberikan sebutan signifikan yang menyumbang kepada model tersebut dan juga dapat memberikan nilai kepada parameter yang dianggarkan. Penerbitan algoritma ini disampaikan dan aplikasinya kepada pemodelan sistem suspensi kereta juga dibincangkan untuk membuktikan keberkesanan algoritma ini.

*Kata kunci*: Algoritma kuasa dua terkecil ortogon, model sistem dinamik, pengenalpasti sistem, model sistem suspensi.

## 1.0 INTRODUCTION

In system identification, a mathematical model is built to describe the behaviour of a particular system based on its input and output data. It is necessary to use model to describe the relationships among the system variables. The developed model has the characteristic performance similar to the unknown system. Many mathematical models applicable to linear and non-linear systems have been proposed in assisting

[1 & 2] Department of Applied Mechanics, Faculty of Mechanical Engineering, Universiti Teknologi Malaysia. 81310 Skudai, Johor Darul Takzim, e-mail: robiah@fkm.utm.my, hishamj@fkm.utm.my

the system identification problem. In the proposed model, it should contain the estimated parameters, which later will be adjusted to match the true system. This process of estimating the parameter is called parameter estimation.

Many techniques for parameter estimation have been studied such as the recursive least square method [1], recursive instrumental variable method, recursive prediction error technique [2], maximum likelihood method [3] and orthogonal least square (OLS) estimation technique [4]. In the OLS technique, the orthogonal function will calculate each parameter in the model to be estimated one at a time. The Error Reduction Ratio (ERR) test, which is the by product of the OLS algorithm, will show percentage reduction that each term makes with respect to the output mean squared error and will indicate the significance of each term in the model. Therefore, OLS is capable of determining the model structure and estimating the parameters of the unknown system. This could lead to a parsimonious model. Applications of OLS for modelling linear-in-the-parameter systems have been successfully applied in various areas [4–6].

The study of the orthogonal least square algorithm applied to a car suspension system based on a quarter-car model is presented in this paper. The implementation of OLS algorithm for subset model selection is derived and examined. The validity of the estimated model is then tested to confirm that the model fits adequately to the true system.

The rest of the paper is organised as follows. Section 2 describes system identification and parameter estimation using orthogonal least square estimation. The effectiveness of OLS is tested using simulated examples. Section 3 reviews the suspension system. Section 4 shows the application of OLS to a car suspension system. Some simulation results are presented in this section. The conclusion reviews and summarises the main contribution of the paper.

## 2.0 ORTHOGONAL LEAST SQUARE PARAMETER ESTIMATION

The study of system identification is important in engineering and science where a mathematical model is built to describe the behaviour of a particular system or process based on the input and output data. The steps involved in system identification are data acquisition, determination of a model structure, parameter estimation and model validation as shown in Figure 1.

Let $y(t)$ be the output of the process or system to be modelled and $u(t)$ is the input signal that influences the system. The goal is to find a model that can predict future output using past measurements. A parametric model is used to represent the wide range of behaviour for the system. In general, the representation of linear-in-the-parameter models is given as

$$y(t) = \sum_{i-1}^{M} p_i(t)\theta_i(t) + \varepsilon(t) \tag{1}$$

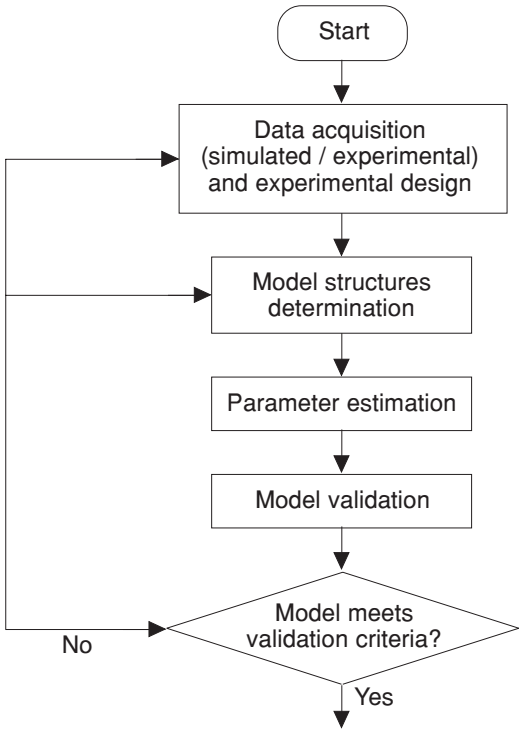


**Figure 1** Stages in system identification

where $t$ =1,...,$N$ and $N$ is the number of data, $M$ is the number of estimated parameters, $p_i(t)$ are the regressors, $\varepsilon(t)$ is some modelling error which is uncorrelated with the regressors and $\theta_i$ are the estimated unknown parameters. The objective is to estimate the parameters $\theta_i$ for $i$ = 0, ..., $M$.

Model structure determination and parameter estimation are important in system identification. Orthogonal least square algorithm (OLS) is an algorithm implementing the forward selection method for subset model selection and also capable of estimating the parameter estimators. The orthogonal least square algorithm transforms the set of regressors $p_i$ into orthogonal basis vectors. In OLS, Equation (1) is transformed into an auxiliary model given as [6]

$$y(t) = \sum_{i=1}^{M} w_i(t) g_i + \varepsilon(t) \tag{2}$$

where $g_i$ are constant coefficients and $w_i(t)$ are the orthogonal data set constructed as

$$\sum_{i=1}^{N} w_i(t) w_j(t) = 0 \tag{3}$$

and $i \neq j$.

The orthogonal polynomials can be calculated by applying Gram-Schmidt procedures as described by Chen *et al.* [4]. However, Korenberg *et al.* [6] defined a simpler procedure to construct a family of orthogonal polynomials by first defining

$$w_0(t) = p_0(t) = 1$$
$$w_i(t) = p_i(t) - \sum_{j=1}^{i-1} \alpha_{ji} w_j(t) \tag{4}$$

where $i = 1, ..., M$ and

$$\alpha_{ji} = \frac{\sum_{t=1}^{N} p_i(t) w_j(t)}{\sum_{t=1}^{N} w_j^2(t)} \tag{5}$$

where $j = 1, ..., i - 1$.

Multiplying equation (4) with $w_j(t)$ and taking the expected value for both sides of the equation gives

$$E[w_j(t) w_i(t)] = E[w_j(t) p_i(t)] - \alpha_{ji} E[w_j^2(t)] \tag{6}$$

where $E[]$ is the expected operator.

Applying the orthogonal property as previously defined in Equation (3), equation (6) becomes

$$0 = E[w_j(t) p_i(t)] - \alpha_{ji} E[w_j^2(t)] \tag{7}$$

The constant coefficient of $\alpha_{ji}$ then can be calculated as

$$\alpha_{ji} = \frac{E[w_j(t) p_i(t)]}{E[w_j^2(t)]} \tag{8}$$

The next step is to obtain the constant coefficient for the estimated parameter $\theta_i$. Equation (2) is multiplied by $w_j(t)$, which will give the following equation

$$w_j(t) y(t) = \sum_{i=1}^{M} w_j(t) g_i(t) w_i(t) + w_j(t) \varepsilon(t) \tag{9}$$

where $\varepsilon(t)$ is uncorrelated with $w_j(t)$ and assumed to be independent zero mean sequence. Using the orthogonal property [Equation (3)] to Equation (9) and taking the expected value gives

$$E[w_j(t) y(t)] - g_j E[w_j^2(t)] \tag{10}$$

Hence, the coefficient of parameter estimates can be computed as

$$g_i = \frac{E[y(t)w_i(t)]}{E[w_j^2(t)]} \tag{11}$$

where $i = 0, ..., M$. Thus, the estimated parameters can be calculated by using the following equation

$$\theta_M = g_M \tag{12}$$

and

$$\theta_i = g_i - \sum_{j=i+1}^{M} \alpha_{ij}\theta_j \tag{13}$$

where $i = M\text{-}1, M\text{-}2, ..., 1$.

Error Reduction Ratio ($ERR$) is an indication of the significance of each regressor term towards the reduction in the total mean squared error. It provides the criteria for forward subset selection. The simple derivation of $ERR$ is summarised in [7] and is calculated from the equation

$$ERR_i = \frac{g_i^2 E[w_i^2(t)]}{E[y^2(t)]} \tag{14}$$

The larger the value of $ERR$, the more significant the term will be in the final model. Using this order of the significant terms, the final regressors are selected. The procedure continues and the criteria to include the number of terms in the input vector is based on

$$1 - \sum_{i=1}^{n_r} ERR_i < \rho_i \tag{15}$$

where $\rho_t$ is the desired tolerance.

The use of orthogonal least square algorithm to identify a model structure and estimate the parameters can be summarised as follows:

(i) Define the values for the maximum input and output lag ($n_u$ and $n_y$) as the input vector.
(ii) Define the value $\rho_t$, the criterion to stop regression.
(iii) Form the regressors $w_i$ as derived in Equation (4) and (5).
(iv) The coefficient $g_i$ is computed from Equation (11).
(v) Error Reduction Ratio ($ERR$) is computed from Equation (14). The larger the value of $ERR$ shows that the more significant the term will be in the final model.

(vi) The criterion to select the number of terms to be included in the final model is calculated from Equation (15). For $1\text{-}\Sigma ERR_i > \rho_t$, steps (3) to (6) are repeated with the terms that have been selected are excluded.

(vii) The model parameter estimators can then be computed by backward substitution as given in Equation (12) and (13).

## 2.1 Model Validity Test

In system identification, model validation is the final procedure after structure selection and parameter estimation. The objective of model validation is to check whether the model fits the data adequately without any biased. For a biased and inadequate model, there is a possibility that the model will poorly predict the system for a sequence of data. Model validation is important since it can detect terms in the residuals that give biased result in the parameter estimation. Residuals give information of the misfits between the data and model. The tests include:

(a) *One Step Ahead Prediction (OSA)*

$$\hat{y}_{OSA}(t) = f\,(y(t-1), \ldots, y(t-n_y), u(t-1), \ldots, u(t-n_u)) \tag{16}$$

where the predicted output is based on the previous input and output data.

(b) *Model Predicted Output (MPO)*

$$\hat{y}_{MPO}(t) = f\,(\hat{y}(t-1), \ldots, \hat{y}(t-n_y), u(t-1), \ldots, u(t-n_u)) \tag{17}$$

where the model predicted output is based on the model previous output data.

(c) *Error Index*

$$error\ index = \left[\frac{\Sigma\left(\hat{y}(k) - y(k))^2\right)}{\Sigma\, y^2(k)}\right]^{\frac{1}{2}} \tag{18}$$

where the accuracy of the predicted model is computed by defining the normalised root mean square of the residuals.

(d) *Correlation Test*

The unbiased model should be uncorrelated to the other variables including the inputs and outputs. Five simple correlation-based tests were briefly described in [8]. Therefore, the prediction error sequence should hold the following conditions:

$$\begin{aligned} &\phi_{\varepsilon\varepsilon}(\tau) = 0, && \tau \neq 0 \\ &\phi_{u\varepsilon}(\tau) = 0, && \text{for all } \tau \\ &\phi_{\varepsilon\varepsilon u}(\tau) = 0, && \tau \geq 0 \\ &\phi_{\varepsilon\varepsilon uu}(\tau) = 0, && \text{for all } \tau \\ &\phi_{\varepsilon uu}(\tau) = 0, && \text{for all } \tau \end{aligned} \tag{19}$$

For a linear model, only the first two tests must be satisfied.

## 2.2 Validation of OLS Algorithm

The effectiveness of OLS was investigated. Two linear discrete models were simulated for structure selection and parameter estimation using the orthogonal least square algorithm. The models investigated were:

Model 1: $y(t) = 0.1y(t-1) + u(t-1) + e(t)$
Model 2: $y(t) = 0.1y(t-1) - 0.8y(t-2) + u(t-1) - 0.2u(t-2) + e(t)$

where $e(t)$ is a random white noise. For each model, OLS was tested first without noise and later with noise corrupting the system. The number of data set is $N$ and the number of estimator is $M$. Therefore, the equation can be written in matrix form as

$$\mathbf{y} = \mathbf{p}\boldsymbol{\theta}$$

where $\mathbf{y}^T = [y(1)\ y(2)\ .....\ y(N)]$
$\boldsymbol{\theta}^T = [\theta_1\ \theta_2\ .....\ \theta_M]$
$\mathbf{p} = [p_1\ p_2\ \cdots\ p_M]$

### Model 1

A sequence of 500 output data was generated using $u(t)$ as a zero mean random sequence without noise corrupting the system. Estimation was performed using the maximum input and output lag $n_u = 2$ and $n_y = 3$ respectively. The criterion to stop regression pt is set to 0. The result is summarised in Table 1.

**Table 1** Estimated parameters for Model 1

| Terms | Estimated value | $ERR_i$ |
|---|---|---|
| $u(t-1)$ | 1.000 | 0.99E + 00 |
| $y(t-1)$ | 0.100 | 0.10E − 01 |
| $u(t-2)$ | −6.55E − 10 | 4.05E − 19 |
| $y(t-3)$ | −1.32E − 9 | 4.05E − 19 |
| $y(t-2)$ | −2.56E − 10 | 2.63E − 20 |

Table 1 shows that the estimated parameters are close to the correct values of the true system. The values of *ERR* for the term $y(t-1)$ and $u(t-1)$ are significantly higher than the other terms, indicating that OLS can pick up the correct terms of the true system with very small prediction errors.

The effectiveness of OLS is further investigated for the system corrupted with noise. A set of 500 output data generated using $u(t)$ as a zero mean random sequence, and $e(t)$ as a white noise sequence. The result is summarised in Table 2. It shows that the *ERR* values for $u(t-1)$ and $y(t-1)$ are again significantly higher than the other terms.

**Table 2** Estimated parameters for Model 1 with noise

| Terms | Estimated value | $ERR_i$ |
|---|---|---|
| $u(t-1)$ | 1.0391 | 0.5050 |
| $y(t-1)$ | 0.0975 | 0.0083 |
| $u(t-2)$ | –0.0051 | 8.2467E – 04 |
| $y(t-2)$ | –0.0570 | 7.7110E – 04 |
| $y(t-3)$ | –0.0059 | 3.4710E – 06 |

## Model 2

A sequence of 500 output data was generated using $u(t)$ as a zero mean random sequence without noise corrupting the system. Estimation was performed using the maximum input and output lag $n_u = 4$ and $n_y = 4$ respectively. The criterion to stop regression $\rho_t$ is set to 0. The result is summarised in Table 3.

**Table 3** Estimated parameters for Model 2

| Terms | Estimated value | $ERR_i$ |
|---|---|---|
| $u(t-1)$ | 0.99456 | 2.244E – 01 |
| $y(t-2)$ | –0.80121 | 1.642E – 01 |
| $u(t-2)$ | –0.20218 | 2.839E – 03 |
| $y(t-1)$ | 0.10214 | 2.555E – 03 |
| $y(t-3)$ | 0.14494E – 02 | 6.859E – 07 |
| $y(t-3)$ | 0.19253E – 02 | 2.165E – 07 |
| $y(t-4)$ | –0.8164E – 03 | 1.015E – 07 |
| $y(t-4)$ | –0.5577E – 04 | 7.893E – 10 |

Table 3 shows that the values of *ERR* for terms $u(t-2)$, $y(t-2)$, $u(t-1)$ and $y(t-1)$ are significantly higher that the other terms indicating again that OLS still can pick up the correct term of the true system with small prediction errors.

The algorithm is repeated for the system corrupted with noise. The result is summarised in Table 4. The *ERR* values for $u(t-2)$, $y(t-2)$, $u(t-1)$ and $y(t-1)$ are again significantly higher than the other terms and those terms are selected. This study shows that OLS is able to pick the correct terms for systems with or without noise.

**Table 4** Estimated parameters for Model 2

| Terms | Estimated value | $ERR_i$ |
|---|---|---|
| $u(t-1)$ | 0.996o3 | 2.030E – 01 |
| $y(t-2)$ | –0.75957 | 1.649E – 01 |
| $u(t-2)$ | –0.18977 | 3.302E – 03 |
| $y(t-1)$ | 0.08274 | 2.434E – 03 |
| $y(t-3)$ | –0.2034E-01 | 4.954E – 07 |
| $u(t-3)$ | –0.4813E-01 | 5.224E – 07 |
| $y(t-4)$ | 0.35601E-01 | 4.839E – 07 |
| $u(t-4)$ | 0.79048E-02 | 1.516E – 10 |

## 3.0 SUSPENSION SYSTEM

Modelling vehicle suspension system has been studied for many years. To simplify a car suspension system, most of the works such as those described in [9] and [10] use a quarter-car model and consider the vehicle motion is in vertical direction. The model for the quarter-car suspension system used in this study is shown in Figure 2.

Assuming $u$ is the system input and $y$, the vertical motion of the system as the output, the transfer function for the system can be obtained. By applying Newton's second law to the above system, the equation of motion is given as [11]

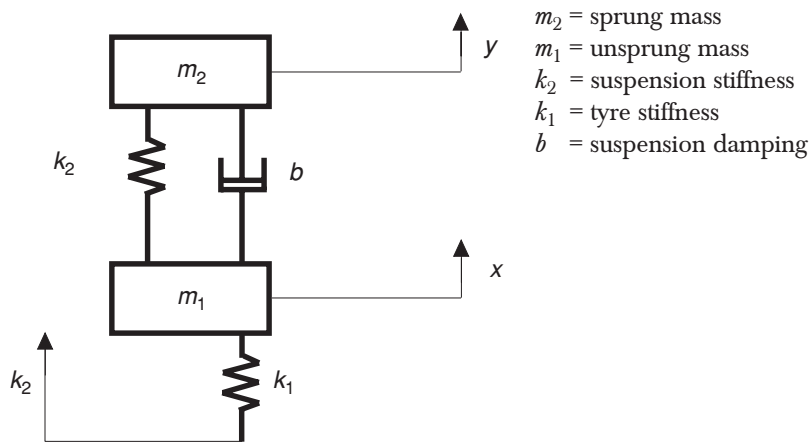


**Figure 2** A schematic diagram of the quarter car model

$$m_1 \frac{d^2x}{dt^2} = k_2(y-x) + b\left(\frac{dy}{dt} - \frac{dx}{dt}\right) + k_1(u-x)$$
$$m_2 \frac{d^2y}{dt^2} = -k_2(y-x) - b\left(\frac{dy}{dt} - \frac{dx}{dt}\right) \tag{20}$$

Using Laplace transform and later eliminating $X(s)$ in the two equations, the transfer function $Y(s)/U(s)$ for the system can be determined as follows

$$\frac{Y(s)}{U(s)} = \frac{k_1(bs+k_2)}{m_2m_1s^4 + (m_1+m_2)bs^3 + [k_1m_2 + (m_1+m_2)k_2]s^2 + k_1bs + k_1k_2}$$

The values of the suspension and hydraulic system parameters for the simulation are summarised in Table 5 [9].

**Table 5** Suspension and hydraulic parameters

| Variables | Meaning | Value |
|---|---|---|
| $m_2$ | Sprung mass | 253 kg |
| $m_1$ | Unsprung mass | 26 kg |
| $k_2$ | Suspension stiffness | 12 000 N/m |
| $k_1$ | Tyre stiffness | 90 000 N/m |
| $b$ | Suspension damping | 1 500 N/m/sec |

## 4.0 SIMULATION AND EXPERIMENTAL RESULTS

A linear model can be represented as a set of mathematical equation. Representations based on equations include difference equation for discrete time system and differential equation for continuous time system. The suspension system model in this study is represented by ARMAX (AutoRegressive Moving Average with exogenous input) model as described by equation below [12]:

$$y(t) = a_1y(t-1) + a_2y(t-2) + \ldots\ldots\ldots + a_{ny}y(t-n_y)$$
$$+b_1u(t-1) + b_2u(t-2) + \ldots\ldots\ldots + b_{nu}u(t-n_y)$$

where $u(t)$ is the input. The number of data set is $N$ and the number of estimator set is $M$.

To implement the OLS algorithms to the suspension system, the simulated input and output data were collected using MATLAB [13] and SIMULINK [14] based on the above transfer function. For the estimation set, a sequence of 634 random data

points were generated and the model was assumed to have 10 possible terms. At the last stage, OLS yields the following result as shown in Table 6.

**Table 6** Estimated model of suspension system

| Terms | Estimated value | $ERR_i$ |
|---|---|---|
| $u(t-1)$ | 2.5125E + 0 | 3.309E + 0 |
| $y(t-2)$ | −1.6624E + 0 | 2.627E + 0 |
| $y(t-3)$ | −7.8741E + 1 | 1.731E + 0 |
| $y(t-4)$ | 1.5532E + 0 | 3.918E + 1 |
| $y(t-5)$ | −7.2316E − 1 | 1.939E − 2 |
| $y(t-6)$ | 1.0434E − 1 | 8.855E − 3 |
| $u(t-2)$ | −5.6518E − 4 | 5.300E − 3 |
| $y(t-3)$ | −7.5995E − 3 | 2.015E − 3 |
| $u(t-1)$ | 1.0456E − 2 | 3.653E − 4 |
| $u(t-4)$ | −3.8109E − 4 | 4.919E − 7 |

The value of *ERR* for $u(t\text{-}4)$ is significantly smaller than the other terms. Therefore, this term can be excluded from the final model. The response for the estimation set of the model is plotted in Figure 3 where the one-step ahead prediction was used as model validation. The figure shows that the predicted output is indistinguishable from the system output. Figure 4 shows the prediction errors for the system.

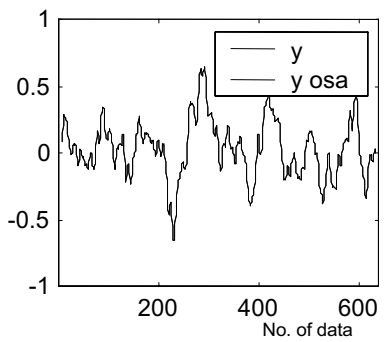


**Figure 3** y vs. yosa (estimation set)

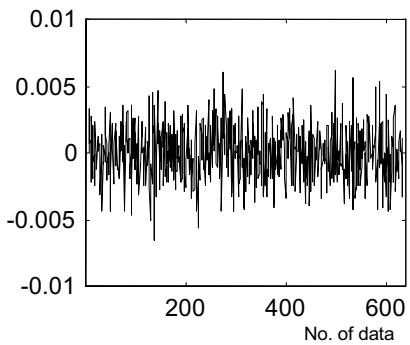


**Figure 4** Error (estimation set)

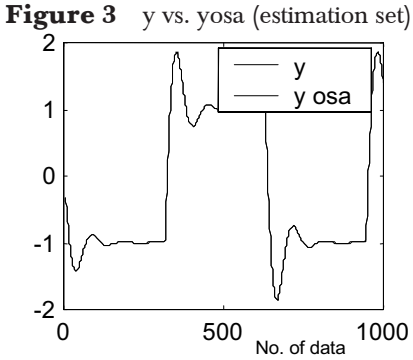


**Figure 5** y vs. yosa (test set)

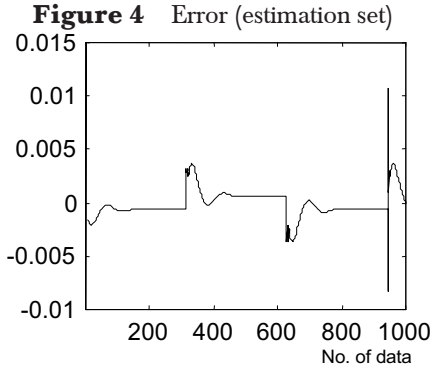


**Figure 6** Error (test set)

A set of test data was generated to further validate the fitted model. A one and a half cycle square wave was used as the input. The system output was generated using the transfer function $Y(s)/U(s)$. The one step ahead prediction of the fitted model was then obtained. Figure 5 shows the one step ahead prediction superimposed on the system output. Figure 6 shows the prediction errors for the system.

The maximal residuals between the output and the estimated ones are between ±0.05 and ±0.01. It shows that the model contains the possible terms and possible structure of the true system using OLS algorithm. The one step ahead prediction on both estimation and test sets are very close to the system output. This indicates that the fitted model using OLS is adequate in representing the system. Other validation tests such as model predicted output and correlation tests are not investigated for this case as they are beyond the scope of this paper.

## 5.0 CONCLUSIONS

This paper has described the application of the orthogonal least square estimation for the selection of a model structure and parameter estimation of unknown dynamic system. A suspension system based on a quarter car model is used for case study. In this algorithm, each parameter can be estimated independently using a simple procedure. Additional terms that need to be added can easily be done without the need for restructuring the previous coefficients since the significant of each term is indicated by the *ERR* test. It is a measure of the reduction in error that resulted when a term is added to a particular model because *ERR* assigned a weight to the relative importance of the term to the model.

The results showed that the algorithm correctly combines structure determination and parameter estimation of the system. The model is then tested with model validity test to confirm the unknown structure. For further work, the extension of OLS to other systems can be investigated to include linear and non-linear systems.

## REFERENCES

[1] Godfrey, K., and P. Jones. 1986. *Signal Processing for Control*. Berlin: Springer-Verlag.

[2] Billings, S. A, and H. Jamaluddin. 1991. A Comparison of the Backpropagation and Recursive Prediction Error Algorithms for Training Neural Networks. *Mechanical Systems and Signal Processing*. 5(3): 233 – 255.

[3] Sharman, K. C., and G. D. McClurkin. 1989. Genetic Algorithms for Maximum Likelihood Parameter Estimation. *Proceedings of IEEE International Conference on Acoustics, Speech and Signal Processing*. 2716 – 2719.

[4] Chen, S., S. A. Billings and W. Luo. 1989. Orthogonal Least Squares Methods and Their Application to Non-linear System Identification. *International Journal of Control*. 50:1873 – 1896.

[5] Chen, S., C. F. N. Cowan and P. M. Grant. 1991. Orthogonal Least Squares Learning Algorithm for Radial Basis Function Networks. *IEEE Transactions on Neural Networks*. 2: 302 – 309.

[6] Korenberg, M., S. A. Billings Y. P. Liu and P. J. McIlroy. 1988. Orthogonal Parameter Estimation Algorithm for Non-linear Stochastic Systems. *International Journal of Control*. 48: 193 – 210.

[7] Jamaluddin, H. 1991. Nonlinear System Identification using Neural Networks. *PhD Thesis*. University of Sheffield, UK.

[8] Billings, S. A. and W. S. F. Voon. 1986. Correlation Based Model Validity Tests for Non-linear Models. *International Journal of Control*. 44: 235 – 244.
[9] Peng, H., R. Strathearn and A. G. Ulsoy. 1997. A Novel Active Suspension Design Technique-Simulation and Experimental Results. *Proceedings of the American Control Conference*, New Mexico, USA. 709 – 713.
[10] Alleyne, A., and Hedrick, J. K., 1995. Nonlinear Adaptive Control of Active Suspensions. *IEEE Transactions on Control System Technology*. 3: 94 – 101.
[11] Ogata, K. 1997. *Modern Control Engineering*. New Jersey: Prentice-Hall International Inc.
[12] Ljung, L., 1999. *System Identification Theory for the User*. New Jersey: Prentice-Hall Inc.
[13] The MathWorks, Inc. 1995. MATLAB Reference Guide. Mass., USA.
[14] The MathWorks, Inc. SIMULINK User's Guide. Mass., USA.